PSIA
Private Schools
Interscholastic
Association

TEST PACKET

Calculator Applications

2020-2021

District Tests

CONTESTANT ID #: _____

GRADE LEVEL: _____

Place Contestant ID Label here
AFTER scoring test:

PSIA
Private Schools
Interscholastic
Association

Calculator Applications

DISTRICT Contest

2020

Grader #1 Score: _____

Grader #2 Score:_____

Grader #3 Score: _____

FINAL SCORE: _____

(Please do not open test until the signal is given to begin.)

1: 257 + 132 + 443 ---------- 1=_____

2: 827 + 765 – 147 ---------- 2=_____

3: 174 – 288 + 675 ---------- 3=_____

4: 757 + 333 – 694 + 734 ---------- 4=_____

5: 166 + 499 + 734 + 522 ---------- 5=_____

6: 7.77 + 4.29 – 1.78 ---------- 6=_____

7: 62.1 + 58.6 – 5.53 – 5.43 ---------- 7=_____

8: 821 – 41.6 + 9710 + 94.5 + 273 ---------- 8=_____

9: 0.239 × 0.789 × 107 ---------- 9=_____

10: 0.568 × 142 / 0.776 ---------- 10=_____

11: What is the sum of the square root of 777 and seventeen and thirty-eight hundredths? ---------- 11=_____

12: Carlie has fourteen 2-liter bottles of soda. One liter is equivalent to 33.8 ounces. How many total ounces of soda does she have? ---------- 12=_____ oz

13: Joanne has twenty-six quarters, ninety nickels, and two hundred seven dimes. How much in total does she have? ---------- 13=$ _____

14: $(-707 - 42.7) / (6440 - 2120)$ ---------- 14=_____

15: $(51.7 - 7.48) \times (8.81 + 9.25)$ ---------- 15=_____

16: $(68.7 - 7.02) + (875 - 959) - (38.5)$ ---------- 16=_____

17: $(20.7 - 0.757)(39.4 - 62.3) + (643)$ ---------- 17=_____

18: $(0.141)\left[\dfrac{-0.679 + 8.2}{0.101}\right] - 0.581$ ---------- 18=_____

19: $\dfrac{(8.63)(1.88)(11.3)}{-54.1} + \dfrac{9.54 - 4.82}{8.06}$ ---------- 19=_____

20: $(0.88)\left\{\dfrac{-0.5}{3.27} - \dfrac{7.67}{86.2} - \dfrac{-69.9}{37.4}\right\}$ ---------- 20=_____

21: $\left(\dfrac{-76.3}{38.7}\right)\left(\dfrac{62.4}{-7.94}\right)\left(\dfrac{3.43 - 0.993}{89}\right)$ ---------- 21=_____

22: $\dfrac{(4820 + 307000 + 3130) - (914000 + 3070 - 1530)}{3360 + 95200}$ ---------- 22=_____

23: $\dfrac{(0.0673 + 0.788) / (0.492 + 0.0882)}{0.562 + 0.556} - \left\{\dfrac{9.35}{\pi - 4.02}\right\}$ ---------- 23=_____

24: A helicopter flies at 112 mph. How long does it take to travel 47 miles? ---- 24=_____ hr

25: A package of 8 pairs of socks sells for $18.99. The store is holding a sale and everything is 20% off. The sales tax is 7.75%. Donny buys one package of socks. How much will he pay per sock? ---------- 25=$ _____

26: A movie is showing on TV in a $2\frac{1}{2}$-hour time slot. The movie is 104 minutes long. What percent of the time slot will be used to show the movie? ---------- 26=_____ %

27: $\dfrac{(382 + 347)}{87.7 - 79.8} + \left[\dfrac{\left(1.51\times10^{3}\right) - \left(1.3\times10^{5}\right)}{312 - 501}\right]$ ---------- 27=_____

28: $\left(\dfrac{9.14\times10^{-3}}{9.75\times10^{-3}}\right) - \dfrac{(0.473) + (0.85) - (6.62)}{(\pi)(8.02 + 0.989)}$ ---------- 28=_____

29: $(0.462)(1.83) + (0.462)(6.53 + 0.807)$ ---------- 29=_____

30: $\left(\dfrac{1}{3.49}\right)\left(\dfrac{1}{0.695}\right)\left(\dfrac{1}{\pi}\right) - (0.483)(8.55)$ ---------- 30=_____

31: $\dfrac{(0.0673)}{(-0.0218)} + (1/0.396) + \dfrac{(938)(0.00657)}{0.167}$ ---------- 31=_____

32: $(2.5 + 0.972 - 9.88)(0.302 - 12.6 - 3.72)$ ---------- 32=_____

33: $\dfrac{(-0.464 / 44.8)}{(-21 / 3.96)} + \dfrac{0.253 + 67 - 0.361}{(-0.606)(-0.77)}$ ---------- 33=_____

34: $\left(\dfrac{1}{1/8.68}\right)(0.875) + \left(4.21\times10^{1}\right)$ ---------- 34=_____

35: How many positive multiples of 17 are less than two billion? ---------- 35=_____ (integer)

36: Juliana estimated the product of 21 and 22 to be 445. What was the percent error in her estimate? ---------- 36=_____ %

37. EQUILATERAL TRIANGLE

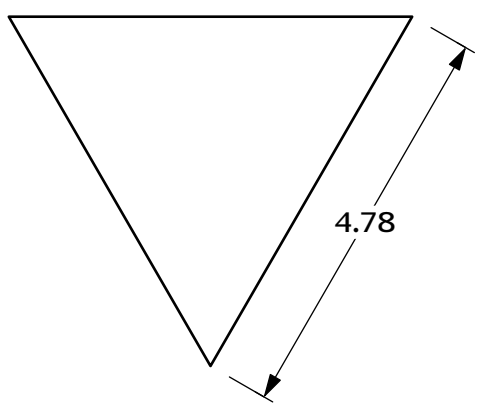

Perimeter = ?

37. _____

38. RECTANGLE

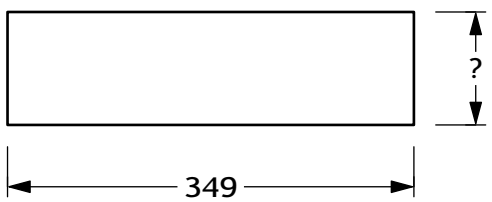

Area = 33900

38. _____

39: $(792)(5.83) - (2.6 - 19.9)^2$ ---------- 39=_____

40: $\dfrac{(856 - 2200)^2}{978} + \dfrac{1}{0.0478}$ ---------- 40=_____

41: $\left[\dfrac{61.3 - 0.936}{7.5 - \pi}\right]^2 / \left(\dfrac{2.83}{15.1}\right)$ ---------- 41=_____

42: $\sqrt{59.3 + 8.95} + 477\sqrt{1.77 + 6.48}$ ---------- 42=_____

43: $\sqrt{\dfrac{\pi + 7740}{357}} + \sqrt{\dfrac{47100}{5460}}$ ---------- 43=_____

44: $\dfrac{\left(2.9 \times 10^0\right) - \left(3.68 \times 10^1\right)}{(97.9 + 286 + 3.93)^2}$ ---------- 44=_____

45: $\dfrac{8900 + 568000}{\sqrt{17500 + 25500 + 4870}} + \left(\dfrac{1}{3610 + 572000}\right)^{1/2}$ ---------- 45=_____

46: $\sqrt{\dfrac{34}{(3420)(1030)}} \times \left[\dfrac{\left(9.55 \times 10^8\right) - \left(8.65 \times 10^8\right)}{\left(5.97 \times 10^7\right) + \left(3.94 \times 10^9\right)}\right]^{1/2}$ ---------- 46=_____

47: Norman and Chad live 5 miles apart. Norman starts walking toward Chad's house at 3.2 mph. At the same time, Chad starts riding his bike toward Norman's house at 8.8 mph. How far has Norman walked when they meet? ---------- 47=_____ mi

48: A cylindrical wooden dowel rod will be made by shaving a rectangular piece of wood with a face that is 3 cm by 3 cm and is 120 cm long. The largest dowel rod possible is made. How much wood is removed to make the rod? ---------- 48=_____ cm^3

49. RIGHT TRIANGLE

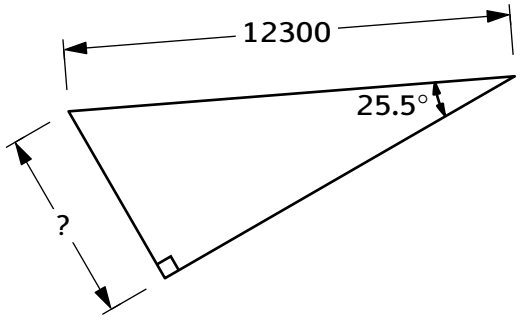

49. _____

50. RIGHT TRIANGLE

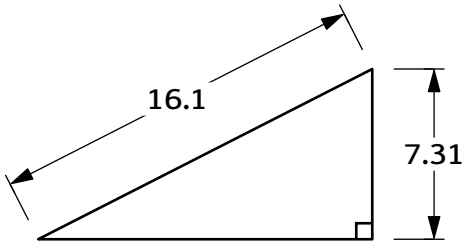

Area = ?

50. _____

51: $(-\pi)(8.49 + 0.227)(73.4)(-\pi - \pi)$ ---------- 51=_____

52: $\left(\frac{9580}{2790}\right)^3 + \sqrt{\frac{\left(4.69 \times 10^4\right)}{128 - 74.7}}$ ---------- 52=_____

53: $\sqrt{98.2 + 4.99} - \frac{1}{\left(6.26 \times 10^{-1}\right)} - (\pi)(3.06)^2$ ---------- 53=_____

54: $\frac{41.4 - 26.1}{9840} - \frac{90.3 + 8050 - 787}{9840} - \frac{198 + 9980}{9840}$ ---------- 54=_____

55: $\sqrt[3]{557 + \pi} - \left(\frac{5480}{313}\right)\left(\frac{94.2}{838}\right)$ ---------- 55=_____

56: $\frac{(224)(-9550 - 2740 - 5280)}{(31.7 + 571 - 6570)(1600)} + (7980)^{0.925}$ ---------- 56=_____

57: $\sqrt{96.9} - \sqrt{2.4} + (\sqrt{207})(\sqrt{588})(\sqrt{752})$ ---------- 57=_____

58: $\left[\frac{\sqrt{(1370)(257)}}{(-587)(9860)}\right]^2 - (-832)(0.930)$ ---------- 58=_____

59: The numbers 1, 3, 4, 5, and 7 are re-arranged to form a 5-digit number at random. What is the probability that the number is greater than 45,000? ---------- 59=_____

60: Ham sandwiches cost \$4.89. Turkey sandwiches cost \$6.29. Amanda bought 63 total sandwiches for \$345.87. How many turkey sandwiches did she buy? ------ 60=_____ (integer)

61. RIGHT CIRCULAR CYLINDER

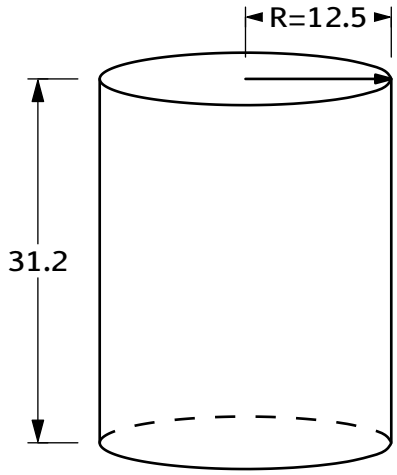

Volume = ?

61. _____

62. CUBE

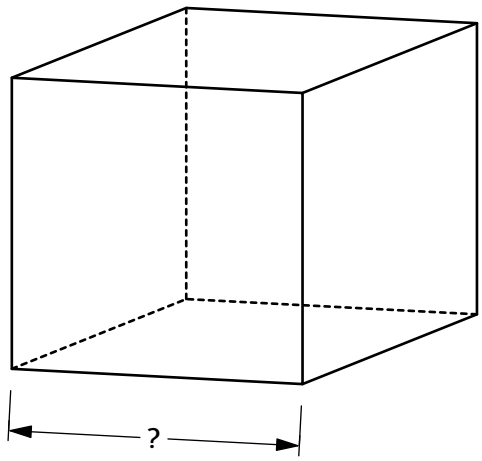

Total Surface Area = 222

62. _____

63: $e^{(0.441)} + e^{(0.188)} + (0.457)^2$ ---------- 63=_____

64: $(5.52 + 7.36)(565)^{0.259} - (-7.24)$ ---------- 64=_____

65: $\dfrac{\sqrt{0.307 + 8.78}}{21 + 0.584} + \left(\dfrac{99.3}{5.88}\right)^{0.211}$ ---------- 65=_____

66: (deg) $[\sin(85^\circ - 343^\circ - 176^\circ)](7.33)$ ---------- 66=_____

67: (deg) $\dfrac{0.129\sin(221^\circ)}{0.657\cos(208^\circ)} + 5.86$ ---------- 67=_____

68: (rad) $\dfrac{\tan(5.54) + (6)(0.661)}{\sin(3.18) - (4)(0.682)}$ ---------- 68=_____

69: (rad) $\cos(3.09)\tan(0.77)\cos(5.17)$ ---------- 69=_____

70: $\dfrac{e^{(0.445 + 0.586 - 0.872)}}{e^{(0.759 + 0.66 - 0.625)}} \times e^{0.583}$ ---------- 70=_____

71: (deg) The formula for work done by gravity is $W = mgh\cos\theta$, where W is work (in joules J), m is mass (in kg), g is 9.8 m/s^2 (the accerelation due to gravity), h is the height (in m) of free fall, and θ is the angle between the gravitational force and the motion of the object. What is the mass of a rock that falls from 40 m high at an angle of 20° with a total work of 673 J? [1 J = 1 kg m^2 / s^2] ---------- 71=_____ kg

72: The price of tater tots doubles every 24 years. In 1992, tots cost $1.49. How much will tots cost in 2028? ---------- 72=$ _____

73. SQUARE AND EQUILATERAL TRIANGLES

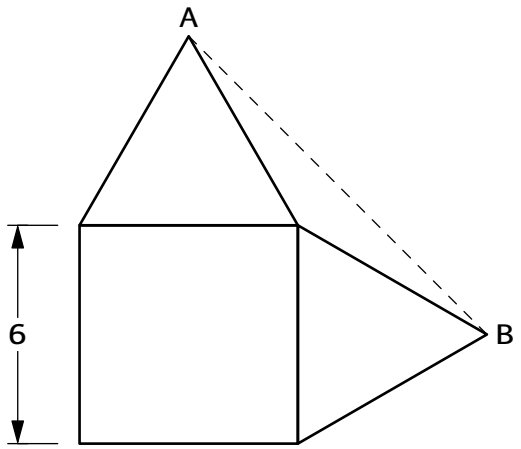

AB = ?

73. _____

74. SQUARE-BASED PYRAMID

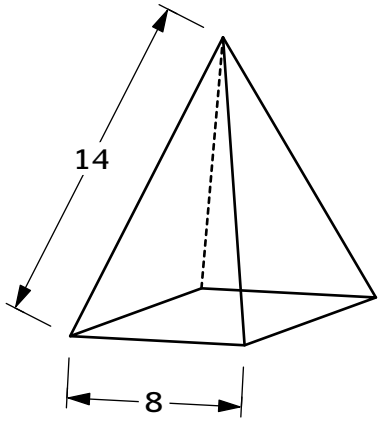

Volume = ?

74. _____

75: $\text{Log}[37700] - \text{Log}[1900] - 5.61\text{Log}[1630]$ ---------- 75=_____

76: $10^{\text{Log}(7.42 + 5.57)} - \text{Ln}\left[e^{(2.39)(5.09)}\right] + 1.44$ ---------- 76=_____

77: $e^{[(0.418 + 0.0469) / (\pi)]} \times \left[\dfrac{0.243(0.931)}{0.967(3.21)}\right]$ ---------- 77=_____

78: $\left\{\dfrac{\left(5.82 \times 10^{8}\right)}{\left(9.63 \times 10^{6}\right) + \left(2.21 \times 10^{8}\right)}\right\}\text{Ln}[0.0188] + 2.89$ ---------- 78=_____

79: $1 - 0.198 + (0.198)^2 - (0.198)^3 + (0.198)^4$ ---------- 79=_____

80: (rad) $\sin(5.38)\cos(0.59) - \cos(5.38)\sin(0.59)$ ---------- 80=_____

PSIA – Calculator Applications
District Test – 2020
www.academicmeet.com

ANSWERS

1= 832
8.32×10^{2}

2= 1450
1.45×10^{3}

3= 561
5.61×10^{2}

4= 1130
1.13×10^{3}

5= 1920
1.92×10^{3}

6= 10.3
1.03×10^{1}

7= 110
1.10×10^{2}

8= 10900
1.09×10^{4}

9= 20.2
2.02×10^{1}

10= 104
1.04×10^{2}

11= 45.3
4.53×10^{1}

12= 946
9.46×10^{2}

13= $ 31.70

14= −0.174
-1.74×10^{-1}

15= 799
7.99×10^{2}

16= −60.8
-6.08×10^{1}

17= 186
1.86×10^{2}

18= 9.92
9.92×10^{0}

19= −2.80
-2.80×10^{0}

20= 1.43
1.43×10^{0}

21= 0.424
4.24×10^{-1}

22= −6.09
-6.09×10^{0}

23= 12.0
1.20×10^{1}

24= 0.420
4.20×10^{-1}

25= $ 1.02

26= 69.3
6.93×10^{1}

27= 772
7.72×10^{2}

28= 1.12
1.12×10^{0}

29= 4.24
4.24×10^{0}

30= −4.00
-4.00×10^{0}

31= 36.3
3.63×10^{1}

32= 103
1.03×10^{2}

33= 143
1.43×10^{2}

34= 49.7
4.97×10^{1}

35= 117647058 (integer)

36= −3.68
-3.68×10^{0}

37= 14.3
1.43×10^{1}

38= 97.1
9.71×10^{1}

39= 4320
4.32×10^{3}

40= 1870
1.87×10^{3}

41= 1020
1.02×10^{3}

42= 1380
1.38×10^{3}

43= 7.59
7.59×10^{0}

44= −0.000225
-2.25×10^{-4}

45= 2640
2.64×10^{3}

46= 0.000466
4.66×10^{-4}

47= 1.33
1.33×10^{0}

48= 232
2.32×10^{2}

49= 5300
5.30×10^{3}

50= 52.4
5.24×10^{1}

51= 12600
1.26×10^{4}

52= 70.1
7.01×10^{1}

53= −20.9
-2.09×10^{1}

54= −1.78
-1.78×10^{0}

55= 6.28
6.28×10^{0}

56= 4070
4.07×10^{3}

57= 9580
9.58×10^{3}

58= 774
7.74×10^{2}

59= 0.500
5.00×10^{-1}

60= 27 (integer)

61= 15300
1.53×10^{4}

62= 6.08
6.08×10^{0}

63= 2.97
2.97×10^{0}

64= 73.7
7.37×10^{1}

65= 1.96
1.96×10^{0}

66= −7.05
-7.05×10^{0}

67= 6.01
6.01×10^{0}

68= −1.10
-1.10×10^{0}

69= −0.428
-4.28×10^{-1}

70= 0.949
9.49×10^{-1}

71= 1.83
1.83×10^{0}

72= $ 4.21

73= 11.6
1.16×10^{1}

74= 273
2.73×10^{2}

75= −16.7
-1.67×10^{1}

76= 2.26
2.26×10^{0}

77= 0.0845
8.45×10^{-2}

78= −7.14
-7.14×10^{0}

79= 0.835
8.35×10^{-1}

80= −0.997
-9.97×10^{-1}

CONTESTANT ID #: _____

GRADE LEVEL: _____

Place Contestant ID Label here
AFTER scoring test:

PSIA
Private Schools
Interscholastic
Association

Calculator Applications

DISTRICT Contest

2021

Grader #1 Score: _____

Grader #2 Score:_____

Grader #3 Score: _____

FINAL SCORE: _____

(Please do not open test until the signal is given to begin.)

1: 468 + 528 + 359 ---------- 1=_____

2: 842 – 223 – 224 ---------- 2=_____

3: 711 – 655 + 261 ---------- 3=_____

4: 4830 + 79300 – 934 – 60100 ---------- 4=_____

5: 677 + 8370 – 5890 + 34.5 ---------- 5=_____

6: 22.6 – 7790 + π + 93.8 – 1160 ---------- 6=_____

7: 16.4 + 0.864 – 0.506 + 74.3 – 33.3 ---------- 7=_____

8: 0.403 – 6.74 – 77.1 + 7.56 + 89 ---------- 8=_____

9: 450 × 0.294 × 0.769 ---------- 9=_____

10: 782 × 657 / 208 ---------- 10=_____

11: Find the sum of "four and thirty-one hundredths," "twenty-five hundredths," and pi. ---------- 11=_____

12: Courtney bought three dresses that cost $22.75, $34.99, and $24.04. She paid with a $100-bill. How much change did she receive? ---------- 12=$ _____

13: A video was posted online and had been seen by 234 people after 1 day and by a total of 578 people after 2 days. How many people viewed the video on the second day? ---------- 13=_____ (integer)

14: $-0.0591 + 0.464 - (-0.0357)$ ---------- 14=_____

15: $15000 - (3020 / 7190)893$ ---------- 15=_____

16: $[-\pi - \pi + 0.547](3.71)(0.43)$ ---------- 16=_____

17: $\left[\dfrac{868 - 741}{42.4}\right] + \dfrac{5490}{58.7}$ ---------- 17=_____

18: $\left[\dfrac{6190(\pi - 5.75)}{91100}\right][4950]$ ---------- 18=_____

19: $\dfrac{(0.0541 - 0.446 - 3.49)}{(-0.0818 - 0.975)} + \dfrac{0.0633}{0.0384}$ ---------- 19=_____

20: $(226)\left\{\dfrac{-11.4}{\pi} - \dfrac{-2900}{9630} - \dfrac{7390}{6010}\right\}$ ---------- 20=_____

21: $\dfrac{(0.915)(-3.49)(-0.0274)}{-0.0385} - \left(\dfrac{2.41}{-0.396 + 0.932}\right)$ ---------- 21=_____

22: $\dfrac{(0.00815 \times 0.408) / 0.422}{(0.00844 \times 0.926) / 0.00484}$ ---------- 22=_____

23: $\dfrac{(9.95)(-4.90)}{(125)(-\pi)}(1.41 - 8.83)$ ---------- 23=_____

24: At a waterpark, 389 guests were children, 788 were teens, and 931 were adults. What percent of the guests were teens? ---------- 24=_____%

25: Claudia has 85 coins in dimes and nickels. She has 31 more nickels than dimes. How much money does she have in coins? ---------- 25=$_____

26: The distance from Oklahoma City to Tulsa is 101 miles. It took Jo 1 hour 26 minutes to make the trip. What was her average speed? ---------- 26=_____mph

27: $\dfrac{8.22\times10^{-8}}{3.33\times10^{-9}} + \dfrac{(0.0239 - 0.105)}{0.328}$ ---------- 27=_____

28: $(-0.246)\,[(0.514 / 0.982)(-70.1 / 6.56)]$ ---------- 28=_____

29: $(621)(65) + (621)(513 - 92.2)$ ---------- 29=_____

30: $3.52\times10^{1} + \left(8.71\times10^{-2}\right)(2970) - \dfrac{3330}{31100 + 331}$ ---------- 30=_____

31: $\dfrac{1}{678} + \dfrac{1}{144} + \dfrac{1}{(0.599)(836)}$ ---------- 31=_____

32: $\left[\dfrac{1/0.864}{1/0.762}\right] + (0.352)(633) - (0.245)(973)$ ---------- 32=_____

33: $\dfrac{98.7 + 0.903}{0.506} + \dfrac{8.13 - 0.39}{0.506} + \dfrac{0.458 - 0.327}{0.506}$ ---------- 33=_____

34: $\left(\dfrac{1240}{4310}\right)\left(\dfrac{1/4510}{1/2150}\right) - \left(3.11\times10^{-1}\right)$ ---------- 34=_____

35: Oscar estimated the product of 381 and 456 to be 170000. What was the percent error in his estimate? ---------- 35=_____ %

36: A university predicts an 8% decline in student enrollment for next year. The current enrollment is 42,500. What is the predicted enrollment for next year? ----- 36=_____

37. RECTANGLE

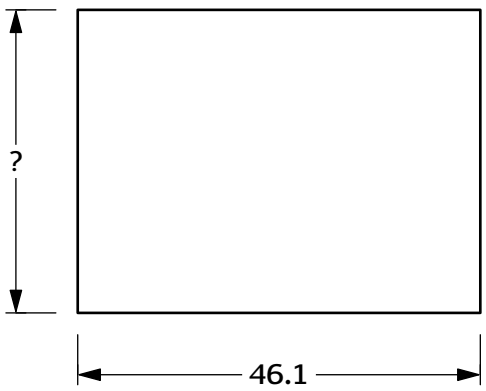

Area = 1600

37. _____

38. CIRCLE

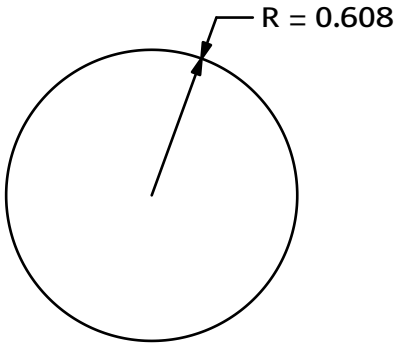

Circumference = ?

38. _____

39: $(-7.52 - 9.24)^2 + (5.67 - 4.23)^2$ ---------- 39=_____

40: $\left[\dfrac{377 - (5.66 / 91.3)^2}{-14.6 - (6.53 / 480)^2}\right]$ ---------- 40=_____

41: $\dfrac{(1/0.0908) - (1/9.07)}{(1/0.419)^3}$ ---------- 41=_____

42: $\sqrt{0.986 + 0.0279 + 0.847} - \dfrac{0.00694}{0.00584}$ ---------- 42=_____

43: $\left[\dfrac{1}{0.376}\right]^2 + \dfrac{\sqrt{18 - 7.05}}{0.609}$ ---------- 43=_____

44: $\sqrt[3]{\dfrac{581 - 415}{5.47 \times 10^{-1}}} + \sqrt{8.7 \times 10^6}$ ---------- 44=_____

45: $\dfrac{(1.28 + 0.014)^{1/2}}{6.87 \times 10^{-2}} - \left[\dfrac{0.638 + 0.82}{0.632}\right]^2$ ---------- 45=_____

46: $\sqrt{\dfrac{5.12}{(0.507)(0.854)}} \times \left[\dfrac{\left(6.12 \times 10^9\right) + \left(4.51 \times 10^8\right)}{\left(5.74 \times 10^{10}\right) - \left(4.2 \times 10^9\right)}\right]^{1/2}$ ---------- 46=_____

47: A 26-foot long rope is anchored to the ground 7.5 feet from the base of the pole and is connected to the top of the pole. How tall is the pole? ---------- 47=_____ ft

48: What is the largest number where the square of the sum of three times the number and 7 results in 89? ---------- 48=_____

49. RIGHT TRIANGLE

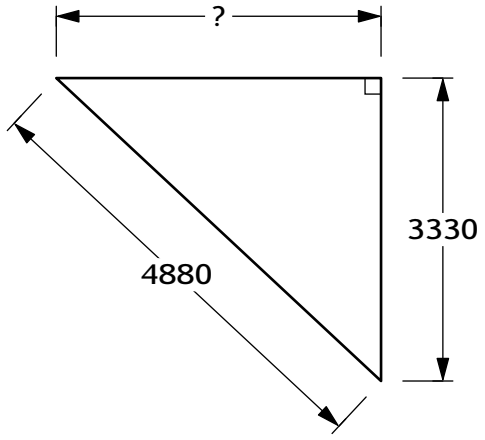

49. _____

50. RIGHT TRIANGLE

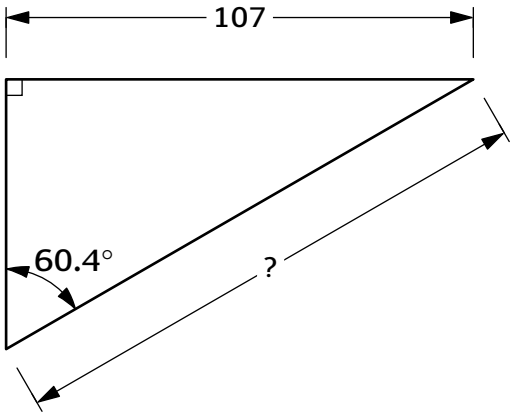

50. _____

51: $\left[\dfrac{555 - 3090 + \sqrt{33.3 + 9050}}{315(9770 - 8090) - 887}\right]^2$ ---------- 51=_____

52: $\sqrt{69.6 + 9.19} - (6.18)(0.223)(61.6)$ ---------- 52=_____

53: $\sqrt{325 / 0.946} - (30 - 47.3)^2 - \sqrt{7090 - 686}$ ---------- 53=_____

54: $\sqrt[3]{\dfrac{1}{7.6 \times 10^4} + \dfrac{0.413}{(-373 + 175)^2}}$ ---------- 54=_____

55: $\dfrac{(204)(-58.8 + 502)}{(\pi - 1.46)(8.55)} + 1/\sqrt{0.0072}$ ---------- 55=_____

56: $400 - \sqrt{\dfrac{758}{4360}} - \dfrac{[(4530)(429)]^{0.926}}{2570 + 685}$ ---------- 56=_____

57: $\sqrt{9.31 + \dfrac{870 \times 5.54}{1.56}} + \left[\dfrac{71.5 \times 338}{988}\right]^2$ ---------- 57=_____

58: $\sqrt{\dfrac{(50.5)(0.865)^2}{8.73 \times 10^{-3}}} - (-3.78)(13.4)$ ---------- 58=_____

59: A dog's leash is 6.4 ft long and is attached to a stake in the backyard for him to run around. What is the percent increase in running room for the dog if the leash is replaced with one that is 8 ft long? ---------- 59=_____ %

60: A box contains 83 white balls, 96 green balls, 48 red balls, and 6 black balls. What is the probability of randomly selecting two balls (without replacement) that are both white? ---------- 60=_____

61. RIGHT CIRCULAR CYLINDER

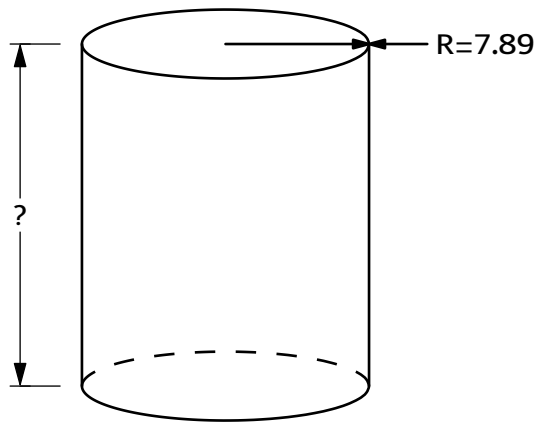

Volume = 3670

61. _____

62. RECTANGULAR PRISM

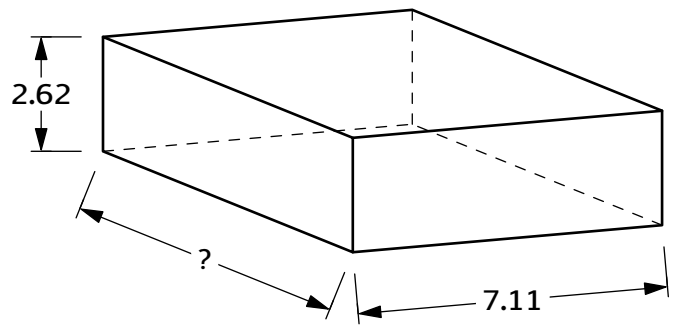

Total Surface Area = 161

62. _____

63: $(437)^{0.448} \times (2.5)^{0.71}$ ---------- 63=_____

64: $(11.5 - 9.79)\,e^{0.721}$ ---------- 64=_____

65: $\left(\frac{0.233}{-0.484}\right)\left(\frac{e^{0.145}}{e^{0.673}}\right)$ ---------- 65=_____

66: (deg) $\frac{\cos(33^\circ - 207^\circ)}{2650 + 342}$ ---------- 66=_____

67: (deg) $[422]\cos(0.901 \times 320^\circ) + 5.57$ ---------- 67=_____

68: (rad) $\frac{84.5 + \cos(0.667)}{30.9 - \tan(0.581)}$ ---------- 68=_____

69: (rad) $\tan(0.167)\cos(0.592)\sin(0.513)$ ---------- 69=_____

70: $(65.9 + 42)^{-0.569 + 0.146}$ ---------- 70=_____

71: The daily revenue from selling energy drinks is computed by multiplying the number of drinks sold by the price per drink. In symbols, $R(x) = x \cdot p(x)$, where $p(x) = 4 - 0.02x$ is the price per drink (in dollars) and x is the number of drinks sold daily. How many drinks should be sold each day to achieve the maximum revenue? 71=_____ (integer)

72: A farmer at a farmer's market sold a total of 80 zucchinis and yellow squashes. He sold each zucchini for \$1.20 and each yellow squash for 90¢. He earned a total of \$82.20 from them. How much did he earn from yellow squash alone? ---- 72=\$ _____

73. CONGRUENT SQUARES

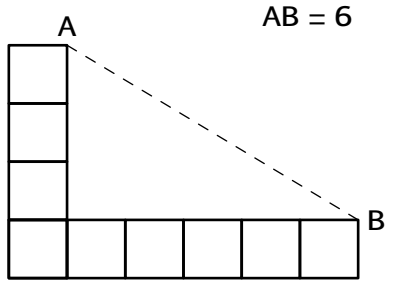

Total Area of Squares = ?

73. _____

74. PARALLELOGRAM

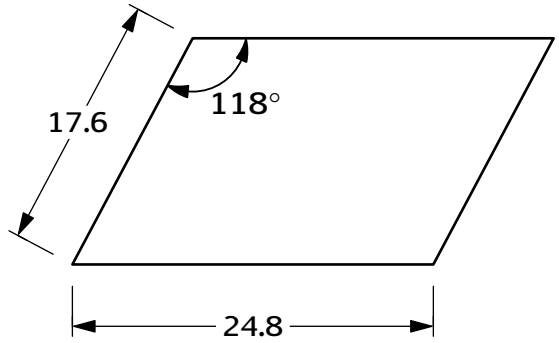

Area = ?

74. _____

75: $\text{Log}[9170] + \text{Log}[2060] + 6650\text{Log}[5360]$ ---------- 75=_____

76: $\frac{1}{3}\text{Log}\left[\frac{5.82 + (0.198)(0.0553) - 0.0428}{2.7 \times 10^5}\right]^3$ ---------- 76=_____

77: $\text{Log}\left[\sqrt{\pi + 46.7} + \sqrt{36.1 + 6290}\right]$ ---------- 77=_____

78: (deg) $\text{Ln}[\tan(213^\circ - 316^\circ + 159^\circ)]$ ---------- 78=_____

79: (rad) $\sin(3.79)\cos(2.41) + \cos(3.79)\sin(2.41)$ ---------- 79=_____

80: $1 + 0.132 + (0.132)^2 + (0.132)^3 + (0.132)^4$ ---------- 80=_____

PSIA – Calculator Applications
District Test – 2021
www.academicmeet.com

ANSWERS

1=	1360 1.36×10^{3}	14=	0.441 4.41×10^{-1}	27=	24.4 2.44×10^{1}
2=	395 3.95×10^{2}	15=	14600 1.46×10^{4}	28=	1.38 1.38×10^{0}
3=	317 3.17×10^{2}	16=	−9.15 -9.15×10^{0}	29=	302000 3.02×10^{5}
4=	23100 2.31×10^{4}	17=	96.5 9.65×10^{1}	30=	294 2.94×10^{2}
5=	3190 3.19×10^{3}	18=	−877 -8.77×10^{2}	31=	0.0104 1.04×10^{-2}
6=	−8830 -8.83×10^{3}	19=	5.32 5.32×10^{0}	32=	−14.7 -1.47×10^{1}
7=	57.8 5.78×10^{1}	20=	−1030 -1.03×10^{3}	33=	212 2.12×10^{2}
8=	13.1 1.31×10^{1}	21=	−6.77 -6.77×10^{0}	34=	−0.174 -1.74×10^{-1}
9=	102 1.02×10^{2}	22=	0.00488 4.88×10^{-3}	35=	−2.15 -2.15×10^{0}
10=	2470 2.47×10^{3}	23=	−0.921 -9.21×10^{-1}	36=	39100 3.91×10^{4}
11=	7.70 7.70×10^{0}	24=	37.4 3.74×10^{1}	37=	34.7 3.47×10^{1}
12=	$ 18.22	25=	$ 5.60	38=	3.82 3.82×10^{0}
13=	344 (integer)	26=	70.5 7.05×10^{1}		

39= 283
2.83×10^{2}

40= −25.8
-2.58×10^{1}

41= 0.802
8.02×10^{-1}

42= 0.176
1.76×10^{-1}

43= 12.5
1.25×10^{1}

44= 2960
2.96×10^{3}

45= 11.2
1.12×10^{1}

46= 1.21
1.21×10^{0}

47= 24.9
2.49×10^{1}

48= 0.811
8.11×10^{-1}

49= 3570
3.57×10^{3}

50= 123
1.23×10^{2}

51= 0.0000213
2.13×10^{-5}

52= −76.0
-7.60×10^{1}

53= −361
-3.61×10^{2}

54= 0.0287
2.87×10^{-2}

55= 6300
6.30×10^{3}

56= 195
1.95×10^{2}

57= 654
6.54×10^{2}

58= 116
1.16×10^{2}

59= 56.3
5.63×10^{1}

60= 0.126
1.26×10^{-1}

61= 18.8
1.88×10^{1}

62= 6.36
6.36×10^{0}

63= 29.2
2.92×10^{1}

64= 3.52
3.52×10^{0}

65= −0.284
-2.84×10^{-1}

66= −0.000332
-3.32×10^{-4}

67= 138
1.38×10^{2}

68= 2.82
2.82×10^{0}

69= 0.0687
6.87×10^{-2}

70= 0.138
1.38×10^{-1}

71= 100 **(integer)**

72= $ 41.40

73= 9.53
9.53×10^{0}

74= 385
3.85×10^{2}

75= 24800
2.48×10^{4}

76= −33.9
-3.39×10^{1}

77= 1.94
1.94×10^{0}

78= 0.394
3.94×10^{-1}

79= −0.0831
-8.31×10^{-2}

80= 1.15
1.15×10^{0}